TWF TIEFBAUTECHNIK

Kaufen | Mieten | Leasen

▶ TWF - Kanaldielen Leichtprofile | Trench Shoring Profiles

Kanaldiele KD 400/6 | Trench Sheet KD 400/6

Profil-Breite (mm)	Profil-Höhe (mm)	Profil-Stärke (mm)	Trägheits-moment (cm^4/m)	Widerstands-moment (cm^3/m)	Gewicht (Kg/ Lfm)	Gewicht (Kg/m^2)
Width (mm)	Height (mm)	Thickness (mm)	Moment of inertia (cm^4/m)	Moment of resistance (cm^3/m)	Weight (kg/m)	Weight (kg/m^2)
400	**50**	**6**	**250**	**98,75**	**22,23**	**55,57**

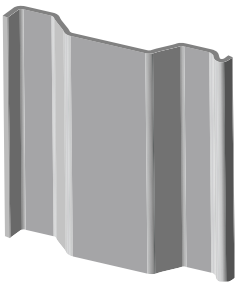

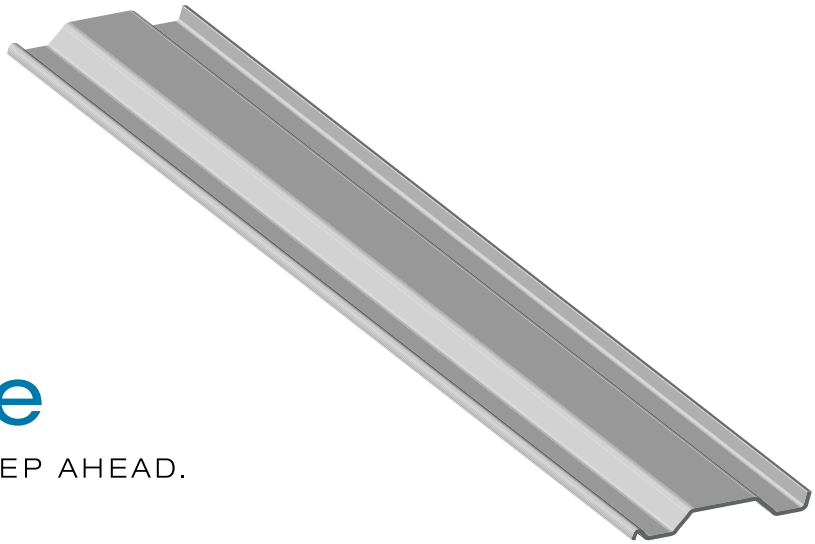

voestalpine
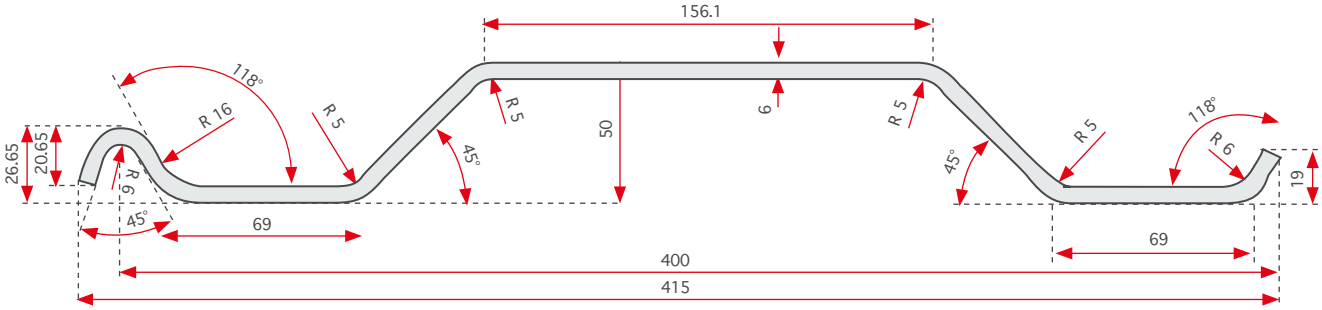
ONE STEP AHEAD.